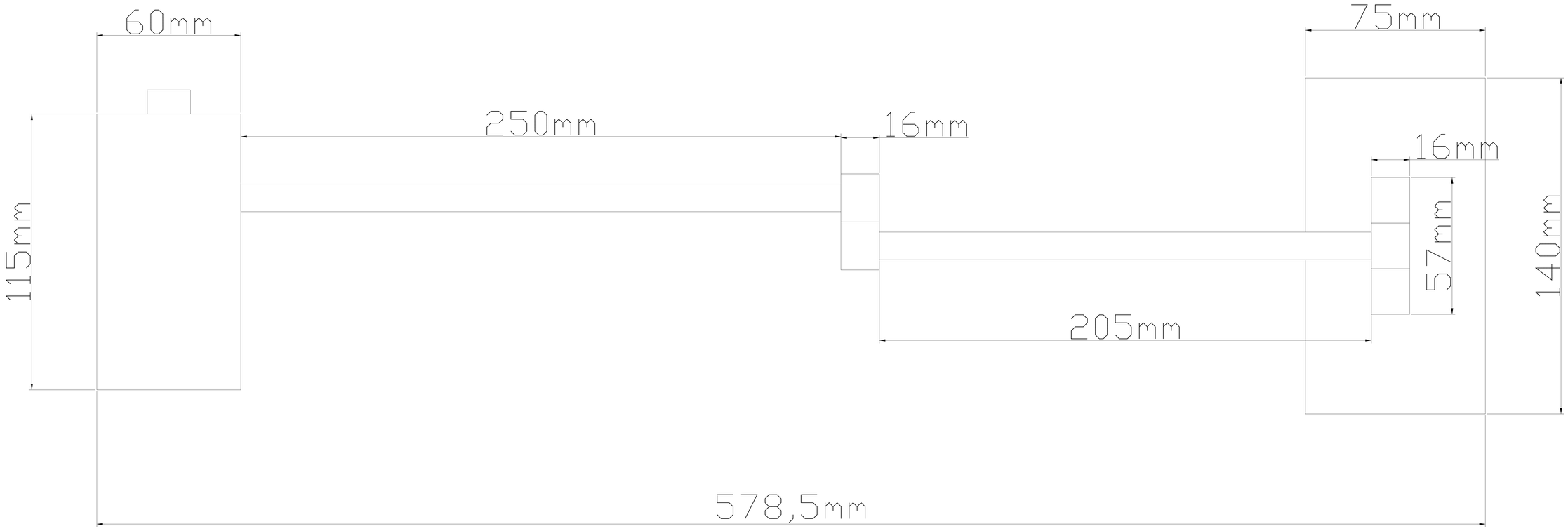
60mm
75mm
250mm
16mm
16mm
115mm
57mm
140mm
205mm
578,5mm

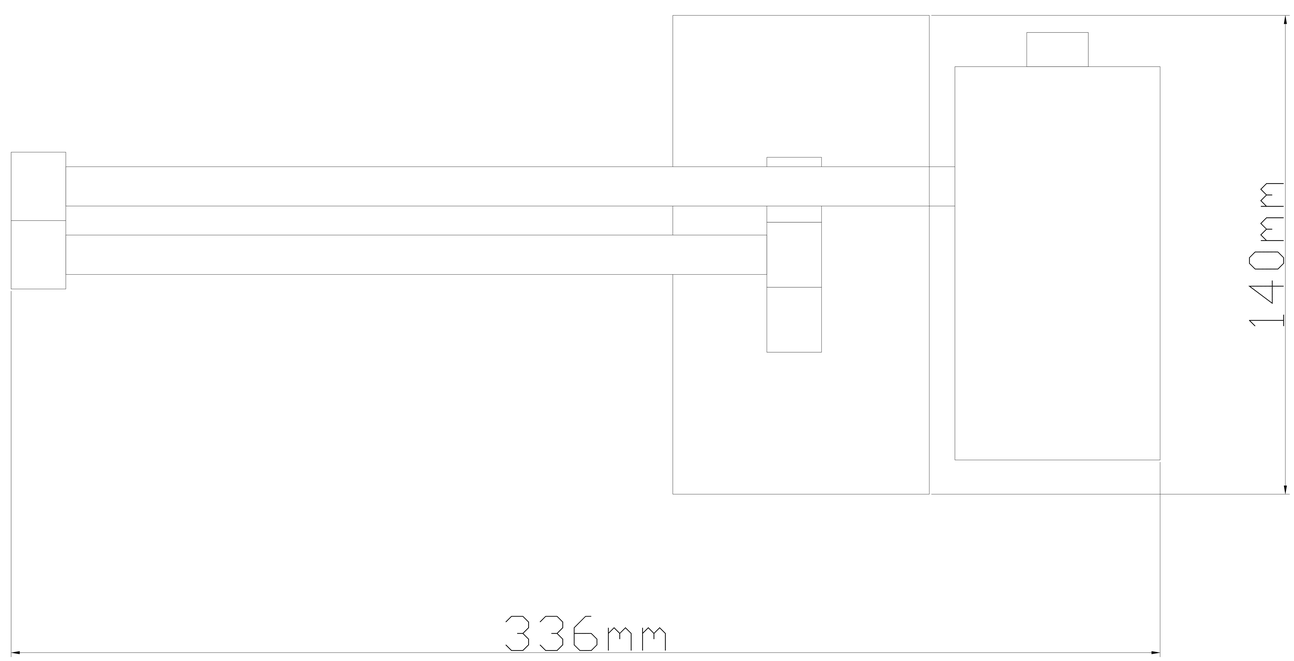
140mm
336mm